3. Center Exhaust Pipe

A: REMOVAL

CAUTION:
Be careful not to burn yourself, because the exhaust pipe becomes extremely hot after running.

1) Set the vehicle on a lift.
2) Disconnect the ground cable from the battery.

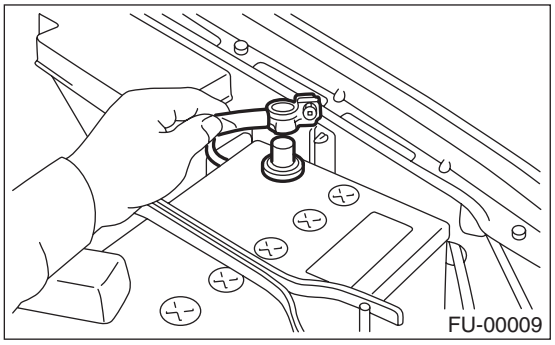

3) Remove the intercooler. <Ref. to IN(H4DOTC)-13, REMOVAL, Intercooler.>
4) Remove the intercooler bracket.

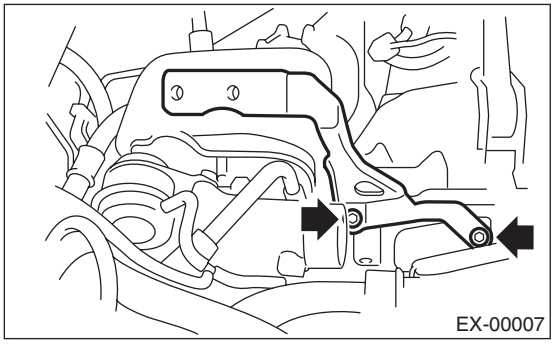

5) Lift up the vehicle.
6) Remove the under cover.
7) Remove the bolts which install the lower side of turbocharger lower cover.

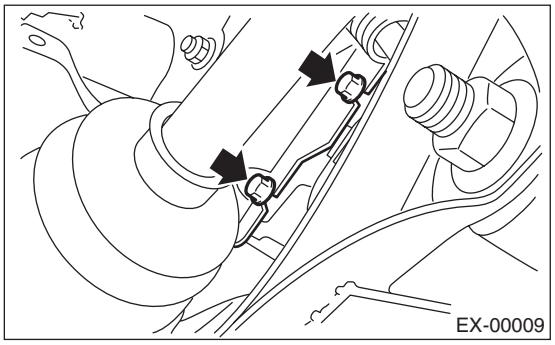

8) Lower the vehicle.
9) Remove the turbocharger upper cover.

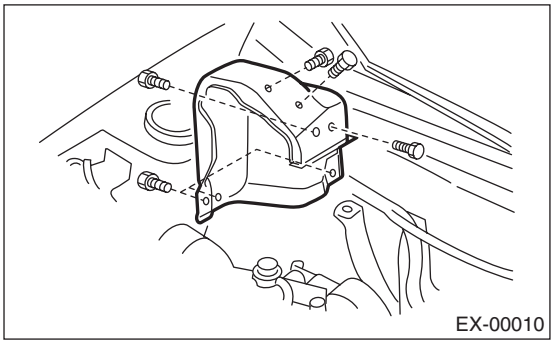

10) Remove the bolts which hold the turbocharger lower cover and center exhaust pipe.

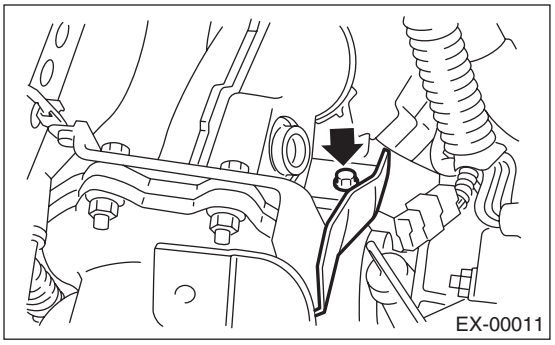

11) Separate the center exhaust pipe from turbocharger.

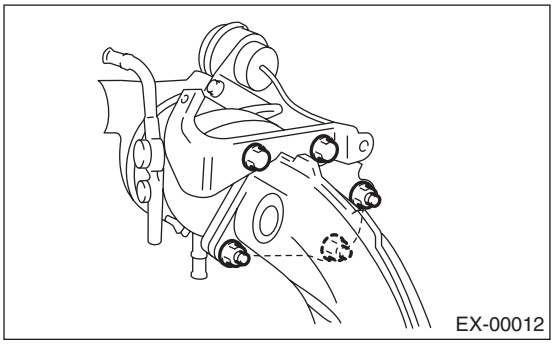

12) Lift up the vehicle.
13) Disconnect the connector from the rear oxygen sensor.

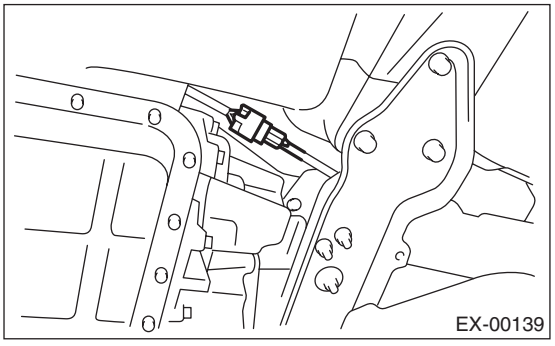

14) Vertically draw out clip from crossmember.

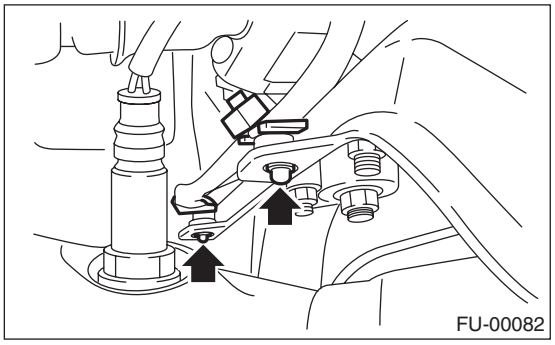

15) Separate the center exhaust pipe from rear exhaust pipe.

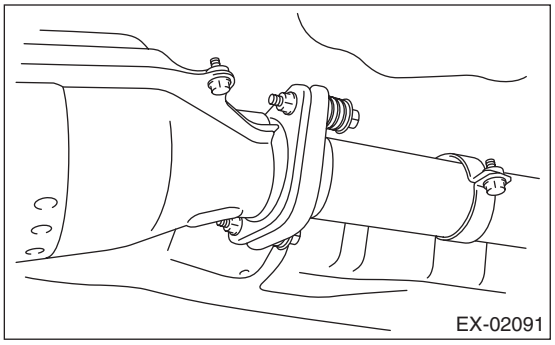

16) Remove the bolt which holds center exhaust pipe bracket to transmission.

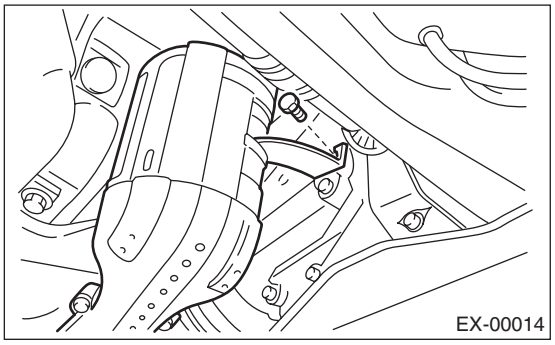

17) Remove the intercooler bracket.
18) Remove the bolt which holds center exhaust pipe to hanger bracket.

CAUTION:
Be careful not to pull down the center exhaust pipe.

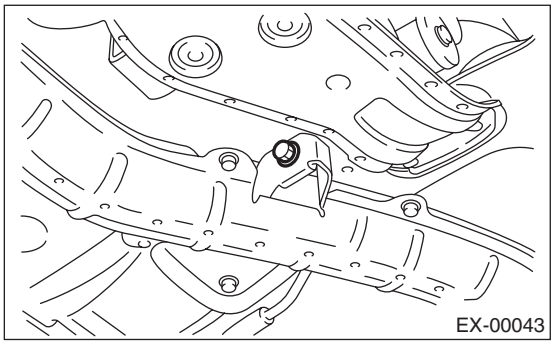

19) Remove the center exhaust pipe.

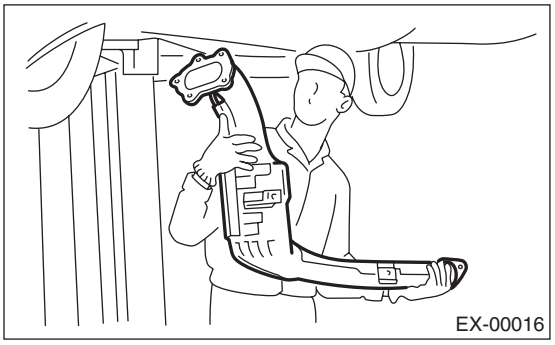

B: INSTALLATION

1) Install the center exhaust pipe and temporarily tighten the bolt which holds center exhaust pipe to hanger bracket.
2) Temporarily tighten the bolt which holds the center pipe to transmission.
3) Connect the center exhaust pipe to turbocharger.

NOTE:
Use a new gasket.

Tightening torque:
35 N·m (3.6 kgf-m, 26 ft-lb)

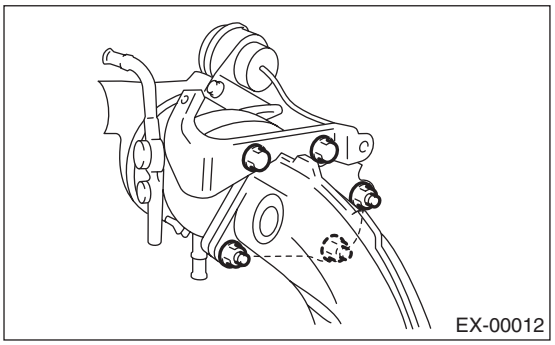

4) Install the center exhaust pipe to rear exhaust pipe.

NOTE:
Use a new gasket.

Tightening torque:
18 N·m (1.8 kgf-m, 13 ft-lb)

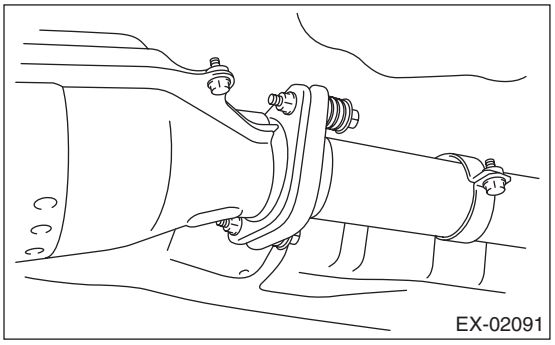

5) Connect the connector to rear oxygen sensor.

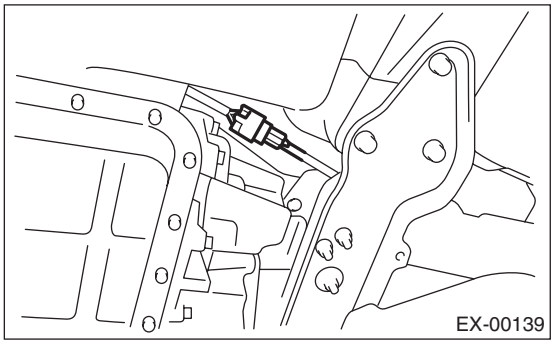

6) Secure clip on the crossmember.

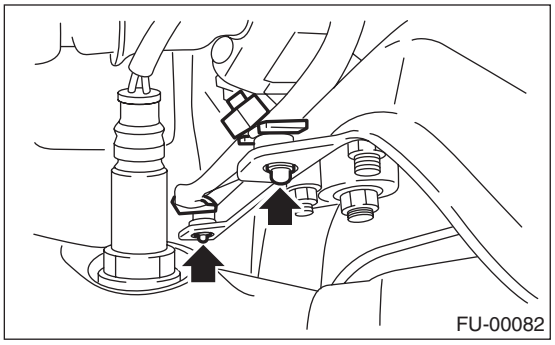

7) Tighten the bolt which holds center exhaust pipe bracket to transmission.

Tightening torque:
30 N·m (3.1 kgf-m, 22.4 ft-lb)

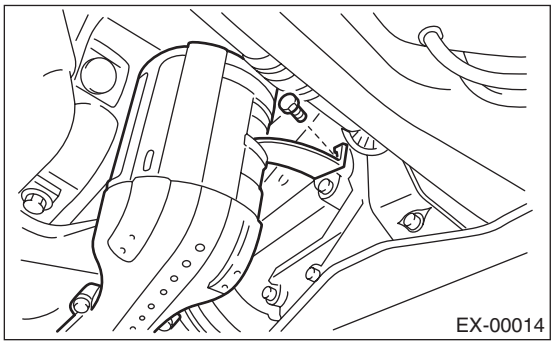

8) Tighten the bolt which holds center exhaust pipe to hanger bracket.

Tightening torque:
35 N·m (3.6 kgf-m, 26 ft-lb)

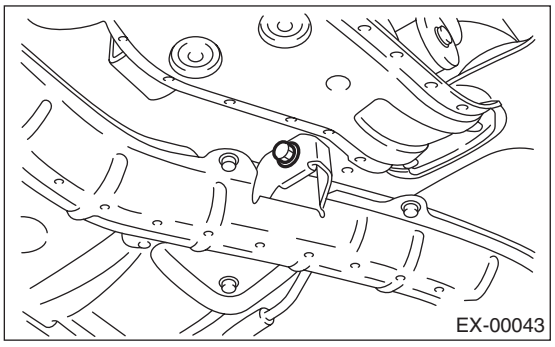

9) Lower the vehicle.

10) Position the turbocharger lower cover, and tighten the bolts which hold the lower cover and center exhaust pipe.

Tightening torque:
7.5 N·m (0.8 kgf-m, 5.5 ft-lb)

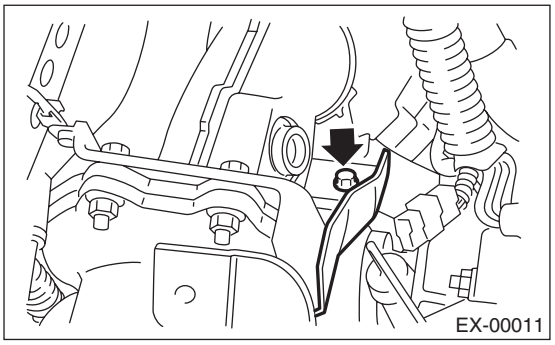

11) Position the turbocharger upper cover, and tighten the bolts which install the upper side of upper cover.

Tightening torque:
7.5 N·m (0.8 kgf-m, 5.5 ft-lb)

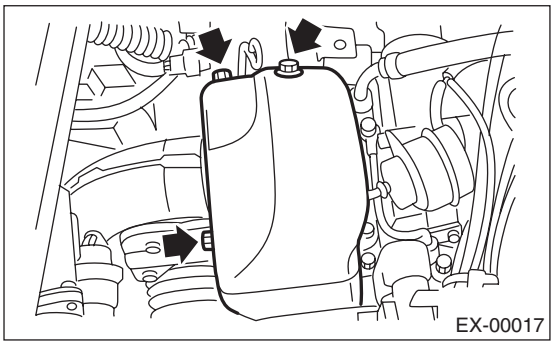

12) Lift up the vehicle.
13) Tighten the bolts which install the under side of turbocharger lower cover.

Tightening torque:
7.5 N·m (0.8 kgf-m, 5.5 ft-lb)

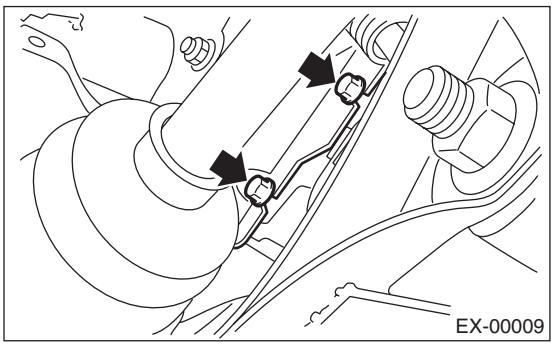

14) Install the under cover.
15) Lower the vehicle.

16) Install the intercooler bracket.

Tightening torque:
16 N·m (1.6 kgf-m, 11.8 ft-lb)

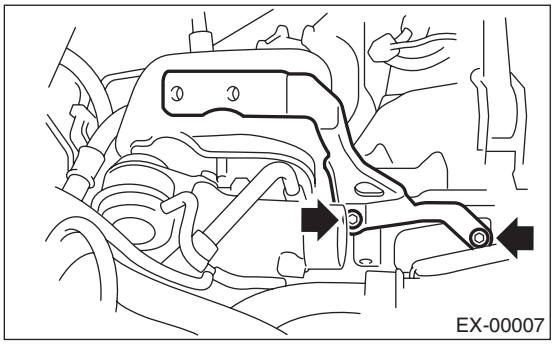

17) Install the intercooler. <Ref. to IN(H4DOTC)-14, INSTALLATION, Intercooler.>
18) Connect the ground cable to the battery.

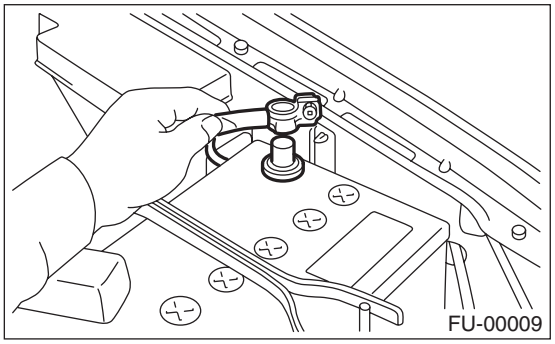

C: INSPECTION

1) Check the connections and welds for exhaust leaks.
2) Make sure there are no holes or rusting.